DW24M2T-B-S ESD Protection Diode

Feature

- Bi-directional ESD protection of two lines
- 420Watts peak pulse power (tp = 8/20μs)
- Working voltage: 24V
- Junction Capacitance: 28pF(Typ)
- Low clamping voltage
- Low leakage current
- IEC 61000-4-2 ±30kV contact ±30kV air
- IEC 61000-4-5 (Lightning) 9A (8/20μs)
- IEC61000-4-4 (EFT) 40A (5/50ns)

Application

- CAN bus protection
- Automotive applications
- Control & Monitoring Systems
- Portable Electronics
- Servers, Notebook, and Desktop PC
- Wireless Bus Protection

Mechanical Data

- Package: SOT-23
- Molding compound flammability rating: UL 94V-0
- RoHS/WEEE Compliant

Schematic & PIN Configuration

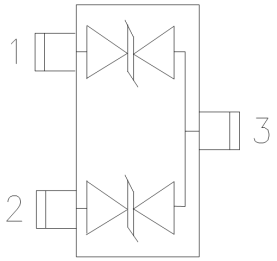

Ordering Information

Part Number	Package	Marking	Packing	Reel Size
DW24M2T-B-S	SOT-23	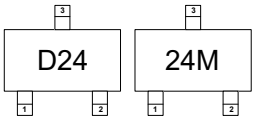	3000 Tape & Reel	7 inches

Absolute Maximum Rating (T_A=25°C unless otherwise Specified)

Parameter	Symbol	Value	Unit
Peak Pulse Power (8/20μs)	P_{pk}	420	W
Peak Pulse Current (8/20μs)	I_{PP}	9	A
ESD per IEC 61000−4−2 (Air) ESD per IEC 61000−4−2 (Contact)	V_{ESD}	±30 ±30	kV
Operating Temperature Range	T_J	−55 to +125	°C
Storage Temperature Range	T_{stg}	−55 to +150	°C

Electrical Characteristics (T_A=25°C unless otherwise Specified)

Parameter	Symbol	Test Condition	Min	Typ	Max	Unit
Reverse Working Voltage	V_{RWM}				24	V
Breakdown Voltage	V_{BR}	I_T = 1mA	26	28.5	30.5	V
Reverse Leakage Current	I_R	V_{RWM} =24V			0.5	μA
Clamping Voltage	V_C	I_{PP} = 1A (8 x 20μs pulse)		31	35	V
Clamping Voltage	V_C	I_{PP} = 9A (8 x 20μs pulse)		35	40	V
Junction Capacitance	C_J	V_R = 0V, f = 1MHz		28	45	pF

Electrical Parameters

Symbol	Parameter
I_T	Test Current
I_{PP}	Maximum Reverse Peak Pulse Current
V_C	Clamping Voltage @Ic

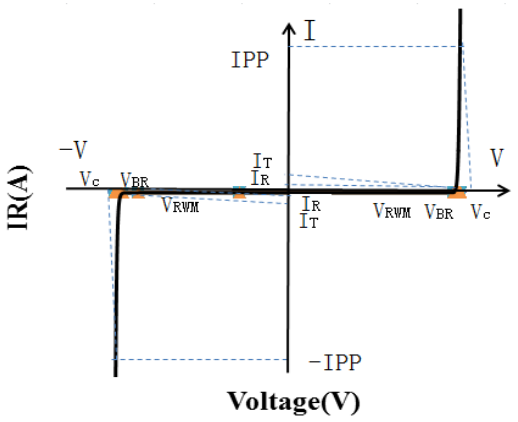

Typical Characteristics

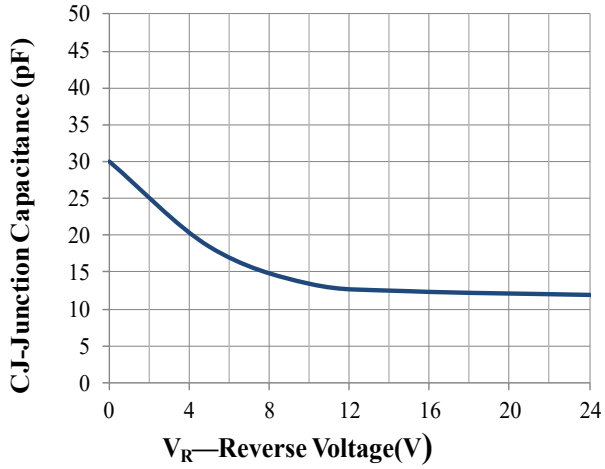

Junction Capacitance vs. Reverse Voltage

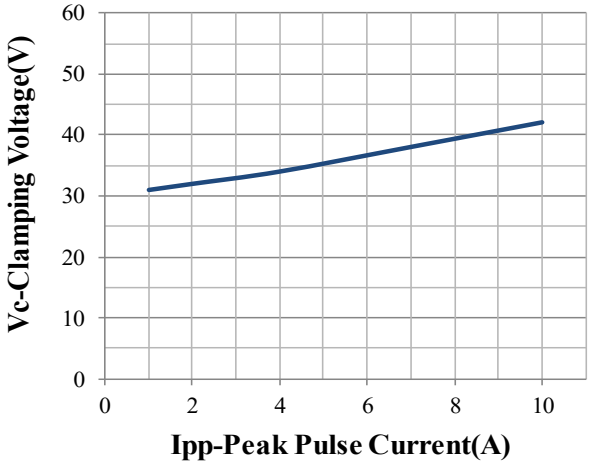

Clamping Voltage vs. Peak Pulse Current

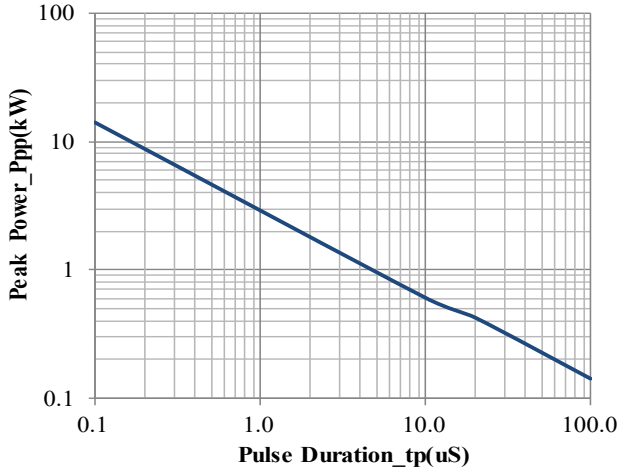

Peak Pulse Power vs. Pulse Time

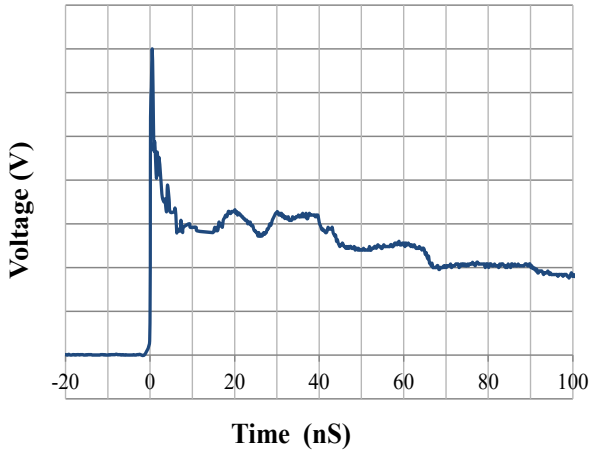

IEC61000−4−2 Pulse Waveform

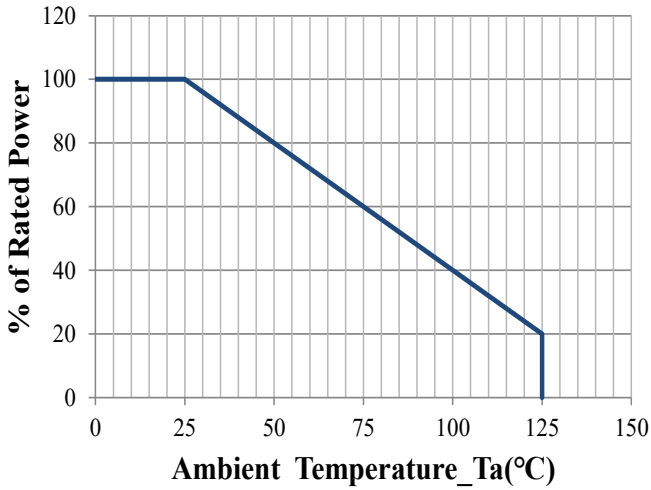

Power Derating Curve

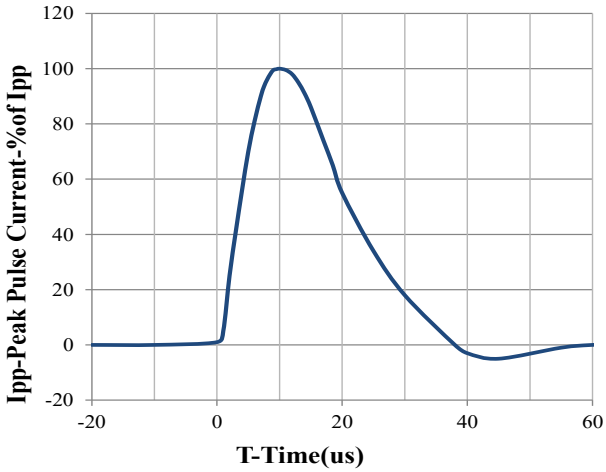

8 X 20us Pulse Waveform

SOT-23 Package Outline Drawing

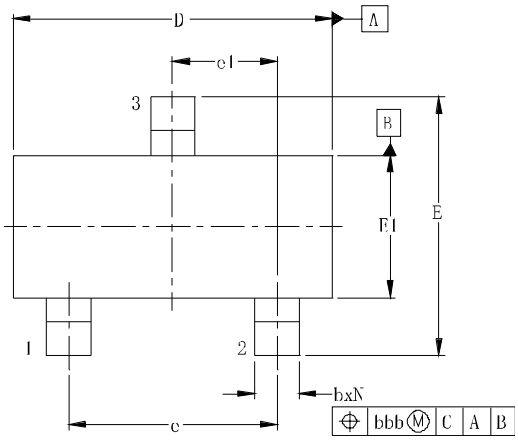

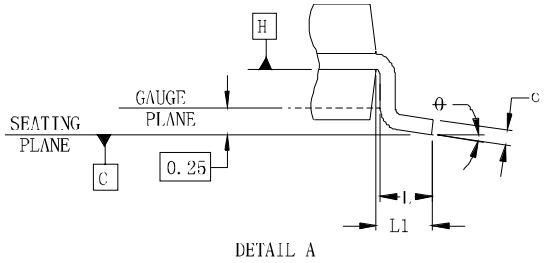

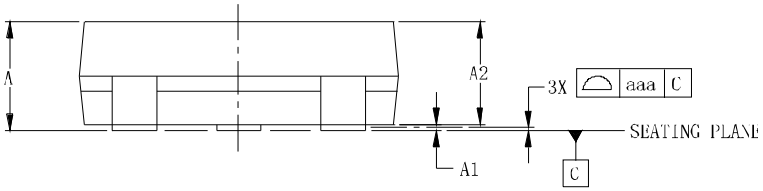

DIMENSIONS						
DIM	INCHES			MILLIMETERS		
	MIN	NOM	MAX	MIN	NOM	MAX
A	.035	–	.044	0.89	–	1.12
A1	.000	–	.004	0.01	–	0.10
A2	.035	.037	.040	0.88	0.95	1.02
b	.012	–	.020	0.30	–	0.51
c	.003	–	.007	0.08	–	0.18
D	.110	.114	.120	2.80	2.90	3.04
E	.082	.093	.104	2.10	2.37	2.64
E1	.047	.051	.055	1.20	1.30	1.40
e	.075			1.90 BSC		
e1	.037			0.95 BSC		
L	.015	.020	.024	0.40	0.50	0.60
L1	.022			(0.55)		
N	3			3		
θ	0°	–	8°	0°	–	8°
aaa	.004			0.10		
bbb	.008			0.20		

SOT-23 Package Outline Drawing

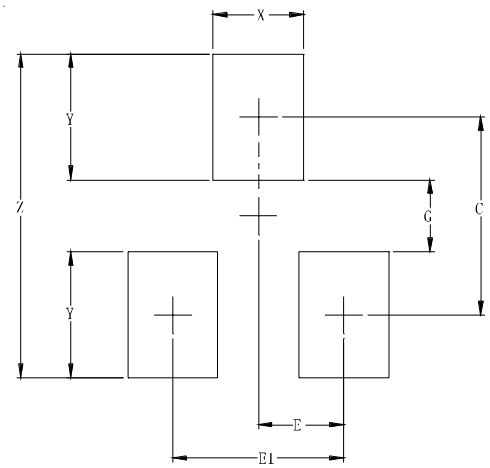

DIMENSIONS		
DIM	INCHES	MILLIMETERS
C	.087	2.20
E	.037	0.95
E1	.075	1.90
G	.031	0.80
X	.039	1.00
Y	.055	1.40
Z	.141	3.60